MICROSOFT WORD / V. 2016 / I-ET-3010.00-1200-800-P4X-002_F.DOC

INDEX OF REVISIONS

REV.	DESCRIPTION AND/OR REVISED SHEETS
0	ORIGINAL ISSUE
A	REVISED WHERE INDICATED
B	REVISED WHERE INDICATED
C	REVISED WHERE INDICATED ACCORDING TO CONSISTENCY ANALYSIS
D	ITEMS 5.13.7.2 AND 5.11.3 REVISED ACCORDING TO CLARIFICATION NOTICE DUE TO BIDDERS QUESTIONS
E	ITEMS 5.1.8, 5.11.2, 5.11.5 AND 6.1.3.2 REVISED ACCORDING TO CLARIFICATION NOTICE DUE TO BIDDERS QUESTIONS
F	ITEM 6.4.6 REVISED ACCORDING TO CLARIFICATION NOTICE DUE TO BIDDERS QUESTIONS

	REV. 0	REV. A	REV. B	REV. C	REV. D	REV. E	REV. F	REV. G	REV. H
DATE	JUL/15/19	NOV/27/19	JUN/18/20	JUL/22/20	SEP/08/20	SEP/10/20	NOV/13/20		
DESIGN	ESUP	ESUP	ESUP	ESUP	ESUP	ESUP	ESUP		
EXECUTION	GNIEDU	GNIEDU	MOTTER	GNIEDU	ANDRÉ LUIS	CAMILA	CAMILA		
CHECK	ANDRÉ LUIS	RAFAELJOSE	GNIEDU	RAFAELJOSE	CAMILA	ANDRÉ LUIS	ANDRÉ LUIS		
APPROVAL	ANDREAZC	ANDRÉ LUIS	ANDRÉ LUIS	ANDRÉ LUIS	GABRIELSA	GABRIELSA	ANDREAZC		

INFORMATION IN THIS DOCUMENT IS PROPERTY OF PETROBRAS, BEING PROHIBITED OUTSIDE OF THEIR PURPOSE

FORM OWNED TO PETROBRAS N-381 REV. L

SUMMARY

1 INTRODUCTION 3

1.1 Object 3
1.2 Definitions 3
1.3 Abbreviations, Acronyms and Initialisms 3

2 REFERENCE DOCUMENTS, CODES AND STANDARDS 4

2.1 External References 4
2.2 Internal References 5

3 ENVIRONMENTAL AND OPERATION CONDITIONS 6

3.1 General 6
3.2 Installation Environment 6
3.3 Available Instrument Air Supply 6
3.4 Requirements for Electric Systems and Power Supply 6

4 PACKAGE INSTRUMENTATION AND CONTROL 7

4.1 Instrumentation 7
4.2 Package Classification 7
4.3 Control 7

5 INSTRUMENTATION REQUIREMENTS 13

5.1 General 13
5.2 Units 14
5.3 Analog Signals 14
5.4 Solenoid Valves 15
5.5 Control Valves 15
5.6 Shutdown Valves (SDV) 15
5.7 Blowdown Valves (BDV) 15
5.8 Instrumentation Cables 16
5.9 Safety and Relief Valves (PSV) 16
5.10 Materials for Pneumatic / Hydraulic Transmission 16
5.11 Junction Boxes 17
5.12 Grounding 17
5.13 Unit Control Panel (UCP) and Remote I/O (RIO) Panel 17
5.14 Cable Tray and Cables 18
5.15 Asset Management System (AMS) 18

6 PACKAGE MAIN EQUIPMENT REQUIREMENTS 19

6.1 Package Instruments Numbering and Identification 19
6.2 UCP Human Machine Interface (HMI) 19
6.3 Programming Tools (P1, P2, P2C, P2S and P2SC Packages) 20
6.4 Package HMI And Screen Requirements 20

7 TEST REQUIREMENTS 22

7.1 Tests 22

1 INTRODUCTION

1.1 Object

1.1.1 This specification describes the minimum requirements for the instrumentation, automation and control to be provided on Package Systems to be installed at FPU.

1.1.2 This specification also describes Integration aspects regarding each Package type. For packages interface and classification, refer to AUTOMATION INTERFACE OF PACKAGED UNITS project documentation.

1.2 Definitions

1.2.1 Refer to I-ET-3010.00-1200-940-P4X-002 - GENERAL TECHNICAL TERMS.

1.3 Abbreviations, Acronyms and Initialisms

AMS	Asset Management System
CCR	Central Control Room (located in the Hull Accommodation)
CSS	Control and Safety System
EMC	Electromagnetic Compatibility
ESD	Emergency Shutdown
FAT	Factory Acceptance Test
FGS	Fire and Gas System
FMS	Flow Metering System
FPU	Floating Production Unit
FRP	Fiberglass Reinforced Plastics
HCS	Hull Control System
HMI	Human-Machine Interface
HSD	Hull Shutdown
I/O	Input/Output
IP	Ingress Protection Ratings
IS	Intrinsically Safe
MMS	Machinery Monitoring System
OPC	Open Platform Communication
PCS	Process Control System
PLC	Programmable Logic Control
PSD	Process Shutdown
SAT	Site Acceptance Test
SIT	Site Integration Test
SNMP	Simple Network Management Protocol
SOS	Supervision and Operation System
TCP/IP	Transmission Control Protocol/Internet Protocol
UCP	Unit Control Panel (Package Control Panel)
USB	Unit Switch Blowdown
USM	Unit Switch Malfunction
USS	Unit Switch Shutdown

2 REFERENCE DOCUMENTS, CODES AND STANDARDS

2.1 External References

2.1.1 International Codes, Recommended Practices and Standards

API - AMERICAN PETROLEUM INSTITUTE

API	MPMS	MANUAL OF PETROLEUM MEASUREMENT STANDARDS - ALL PARTS
API	RP 551	PROCESS MEASUREMENT
API	RP 552	TRANSMISSION SYSTEMS
API	RP 14C	ANALYSIS, DESIGN, INSTALLATION, AND TESTING OF SAFETY SYSTEMS FOR OFFSHORE PRODUCTION FACILITIES
API	RP 520	SIZING, SELECTION AND INSTALLATION OF PRESSURE-RELIEVING DEVICES
API	SPEC 6D	SPECIFICATION FOR PIPELINE AND PIPING VALVES
API	STD 526	FLANGED STEEL PRESSURE-RELIEF VALVES
API	STD 527	SEAT TIGHTNESS OF PRESSURE RELIEF VALVES

ASME - AMERICAN SOCIETY OF MECHANICAL ENGINEERS

ASME	SECTION VIII	DIVISION 1 RULES FOR CONSTRUCTION OF PRESSURE VESSELS

IEC - INTERNATIONAL ELECTROTECHNICAL COMMISSION

IEC	60079	EXPLOSIVE ATMOSPHERES
IEC	60092	ELECTRICAL INSTALLATIONS IN SHIPS
IEC	60331	TESTS FOR ELECTRIC CABLES UNDER FIRE CONDITIONS – CIRCUIT INTEGRITY
IEC	60529	DEGREES OF PROTECTION PROVIDED BY ENCLOSURES (IP CODE)
IEC	61000	ELECTROMAGNETIC COMPATIBILITY (EMC) - ALL PARTS
IEC	61086	COATINGS FOR LOADED PRINTED WIRE BOARDS (CONFORMAL COATINGS)
IEC	61892	MOBILE AND FIXED OFFSHORE UNITS - ELECTRICAL INSTALLATIONS
IEC	62337	COMMISSIONING OF ELECTRICAL, INSTRUMENTATION AND CONTROL SYSTEMS IN THE PROCESS INDUSTRY – SPECIFIC PHASES AND MILESTONES
IEC	62381	AUTOMATION SYSTEMS IN THE PROCESS INDUSTRY- FACTORY ACCEPTANCE TEST (FAT), SITE ACCEPTANCE TEST (SAT) AND SITE INTEGRATION TEST (SIT)

ISA - INTERNATIONAL SOCIETY OF AUTOMATION

ISA	5.1	INSTRUMENTATION SYMBOLS AND IDENTIFICATION
ISA	75.01.01	INDUSTRIAL-PROCESS CONTROL VALVES

ISO - INTERNATIONAL ORGANIZATION FOR STANDARDIZATION

ISO	10497	TESTING OF VALVES - FIRE TYPE-TESTING REQUIREMENTS

2.1.2 Brazilian Codes and Standards

INMETRO - INSTITUTO NACIONAL DE METROLOGIA, NORMALIZAÇÃO E QUALIDADE INDUSTRIAL

PORTARIA Nº 179 (18/MAIO/2010)	REGULAMENTO DE AVALIAÇÃO DA CONFORMIDADE PARA EQUIPAMENTOS ELÉTRICOS PARA ATMOSFERAS EXPLOSIVAS, NAS CONDIÇÕES DE GASES E VAPORES INFLAMÁVEIS E POEIRAS COMBUSTÍVEIS.
PORTARIA Nº 89 (23/FEVEREIRO/ 2012)	ALTERAÇÃO DA PORTARIA INMETRO Nº 179, DE 18/MAIO/2010.

2.1.3 All MTE – Ministério do Trabalho regulations (NRs) shall be followed.

2.1.4 Classification Society

The detailed design shall be submitted to approval by Classification Society. The design and installation shall take into account their requirements and comments.

2.2 Internal References

2.2.1 Project Documents

I-ET-3010.00-5140-700-P4X-001	SPECIFICATION FOR ELECTRICAL DESIGN FOR OFFSHORE UNITS
I-ET-3010.00-5140-700-P4X-002	SPECIFICATION FOR ELECTRICAL MATERIAL AND EQUIPMENT FOR OFFSHORE UNITS
I-ET-3010.00-5140-700-P4X-003	ELECTRICAL REQUIREMENTS FOR PACKAGES FOR OFFSHORE UNITS
I-ET-3010.00-1200-800-P4X-013	GENERAL CRITERIA FOR INSTRUMENTATION PROJECTS
I-ET-3010.00-5520-888-P4X-001	AUTOMATION PANELS
I-ET-3010.00-1200-800-P4X-010	CRITERIA FOR ESTABLISHING CABLE CODES AND CABLE GLAND CODES
I-ET-3010.00-1200-800-P4X-012	CRITERIA FOR DETAILING DESIGN CAUSE & EFFECT MATRIX
I-DE-3010.00-5140-700-P4X-003	GROUNDING INSTALLATION TYPICAL DETAILS
I-ET-3010.00-5520-800-P4X-001	SUPERVISION AND OPERATION SYSTEM (SOS) SCREENS
I-LI-3010.00-5140-797-P4X-001 -	ELECTRICAL SYSTEM AUTOMATION INTERFACE SIGNALS LIST
DR-ENGP-I-1.15-R.3	COLOR CODING

2.2.2 Names below and respective document codes may vary according to each project but, in general, the following documents shall be considered along with this technical specification.

- AUTOMATION INTERFACE OF PACKAGE UNITS
- GENERAL SPECIFICATION FOR AVAILABLE UTILITIES

- MOTION ANALYSIS
- PRELIMINARY ACCELERATION DATA
- INSTRUMENTATION ADDITIONAL TECHNICAL REQUIREMENTS
- AUTOMATION NETWORK REQUIREMENTS

3 ENVIRONMENTAL AND OPERATION CONDITIONS

3.1 General

3.1.1 All equipment, panels and instrumentation devices shall be suitable for the environmental and operating conditions described in item 3.2.

3.1.2 All equipment, panels and instrumentation devices shall be designed to operate properly under wave motions in accordance with Classification Society. For a detailed evaluation of maximum expected motions and accelerations during transit and operational conditions, see MOTION ANALYSIS and PRELIMINARY ACCELERATION DATA project documentation.

3.1.3 Regarding electromagnetic and radiofrequency issues, all equipment and panels shall be designed to operate properly and in accordance with IEC applicable standards and Classification Society requirements.

3.2 Installation Environment

3.2.1 For operating and environmental conditions, refer to INSTRUMENTATION ADDITIONAL TECHNICAL REQUIREMENTS project documentation.

3.3 Available Instrument Air Supply

3.3.1 For details about available instrument air supply, see GENERAL SPECIFICATION FOR AVAILABLE UTILITIES project documentation.

3.3.2 When applicable, one instrument air supply connection shall be provided per Package at the skid limit.

3.3.3 It shall be informed the Package air consumption for instruments and for panel pressurization.

3.4 Requirements for Electric Systems and Power Supply

3.4.1 Panels of Packages shall convert and distribute the different power supplies inside the panel, including where necessary a stabilized power supply unit(s) for cabinet internal distribution of the 24 Vdc. The input voltage for the 24 Vdc converters is in accordance with I-ET-3010.00-5140-700-P4X-003 - ELECTRICAL REQUIREMENTS FOR PACKAGES FOR OFFSHORE UNITS.

3.4.2 Electrical material and equipment shall comply with I-ET-3010.00-5140-700-P4X-002 - SPECIFICATION FOR ELECTRICAL MATERIAL AND EQUIPMENT FOR OFFSHORE UNITS. Electrical installations inside the Package and Package power supply shall comply with I-ET-3010.00-5140-700-P4X-003 - ELECTRICAL REQUIREMENTS FOR PACKAGES FOR OFFSHORE UNITS.

4 PACKAGE INSTRUMENTATION AND CONTROL

4.1 Instrumentation

4.1.1 Unless specified in the Package Specification, Data Sheets or Material Requisition, the instrumentation on Packages shall follow the requirements stated in this specification. Any deviations shall be clearly pointed out in the Package proposal.

4.2 Package Classification

4.2.1 In order to standardize integration interface and optimize exchanged information, Packages have been grouped according to their integration level with the safety system of CSS, as follows:

- P0: Packages without dedicated control panel. Their control and safeguarding logic will be performed by CSS;
- P1: Packages with standard control panel and few interfaces (hardwired signals) with the CSS;
- P2: P1 type able to be supervised by SOS HMIs through digital network communication (Ethernet);
- P2C: P2 type able to be supervised and operated by SOS HMIs through digital network communication (Ethernet);
- P2S: P2 type able to be supervised by a dedicated HMI, located at CCR, through digital network communication;
- P2SC: P2 type able to be supervised and operated by a dedicated HMI (located at CCR) and SOS HMIs, through digital network communication (Ethernet).

4.2.2 For a list of Packages with their respective Package types, refer to AUTOMATION INTERFACE OF PACKAGE UNITS project documentation.

4.3 Control

4.3.1 Packages shall have their operating controls and shutdown systems defined according to the Package Technical Specification.

4.3.2 P0 Package Requirements

4.3.2.1 There are no dedicated control panels.

4.3.2.2 Their control and safeguarding, where required, will be performed by CSS.

4.3.2.3 It shall be equipped with their instruments and accessories.

4.3.2.4 The instrumentation Package shall comply with project requirements and shall have independent functions for control/ monitoring and safety.

4.3.2.5 It shall be informed the I/O count and the IS Instruments, if present.

4.3.2.6 All logic diagrams, cause and effect matrix, P&IDs, Instrument List and I/O List, depicting all Package logic, shall be supplied along with Package.

4.3.2.7 Cause and effect matrix shall be issued in accordance with I-ET-3010.00-1200-800-P4X-012 – CRITERIA FOR DETAILING DESIGN CAUSE & EFFECT MATRIX

4.3.3 P1 Package Requirements

4.3.3.1 Dedicated control panel(s) with associated HMI, as part of the Package supply, shall be responsible for the control, operation, protection and monitoring of the Package. Panel location is defined in Package Technical Specification, Data Sheets and Equipment List.

4.3.3.2 UCP shall be capable of carrying out interlocking, process automation and start-up, shutdown, normal operation and safety procedures.

4.3.3.3 Even if not indicated in respective Package P&ID, there shall be hardwired interface with, at least, the following information, unless explicitly stated in the Package and Project documentation:

- REMOTE PRESSURIZED SHUTDOWN (XSLL-1) – Fail Safe 24 Vdc signal sent by CSS for safe shutdown (without de-pressurization) of the Package. Sent by CSS to Package.
- REMOTE DE-PRESSURIZED BLOWDOWN (XSLL-2) – Fail Safe 24 Vdc signal sent by CSS for safe depressurization of the Package. Sent by CSS to Package.
- SHUTDOWN ACKNOWLEDGE SIGNAL (USS-1) – indicates that the Package has an internal shutdown condition (including electrical failure) or received a pressurized shutdown signal from CSS (XSLL-1) and is starting to process its shutdown commands. This package output shall be a normally open dry contact. This contact opens to indicate the shutdown acknowledge. Sent by Package Unit to CSS.
- SHUTDOWN CONFIRMED SIGNAL (USS-2) – Indicates that the Package successfully finished the pressurized shutdown command. This package output shall be a normally open dry contact. This contact opens to indicate the shutdown confirmation. Sent by Package to CSS.
- BLOWDOWN ACKNOWLEDGE SIGNAL (USB-1) – Indicates that the Package has an internal blowdown condition or received a de-pressurized blowdown signal from CSS (XSLL-2) and is starting to process its depressurization commands. This package output shall be a normally open dry contact. This contact opens to indicate the blowdown acknowledge. Sent by Package to CSS.
- BLOWDOWN CONFIRMED SIGNAL (USB-2) – Indicates that the Package successfully finished the received blowdown command. This package output shall be a normally open dry contact. This contact opens to indicate the blowdown confirmation. Sent by Package to CSS.
- RUNNING / STOPPED SIGNAL (YSHL) – Indicates whether the Package is running or stopped. This package output shall be a normally open dry contact. This contact opens to indicate stopped condition. Signal sent by Package to CSS.

- MALFUNCTION SUMMARY (USM) – Summary signal of all conditions that cause pre-alarm or Package malfunction. This package output shall be a normally open dry contact. This contact opens to indicate pre-alarm or package malfunction. Sent by Package to CSS.
  NOTE 1: XSLL-2, USB-1 and USB-2 signals are applicable for Packages that have the possibility of both pressurized and de-pressurized stops, such as compressors and other Packages that manipulate gas.
  NOTE 1: XSLL-1 and XSLL-2 signals shall be read in the PACKAGE UCPs as a normally open dry contact.

4.3.3.4 These signals and any eventual signal necessary in a specific PACKAGE are described in AUTOMATION INTERFACE OF PACKAGED UNITS project documentation.

4.3.3.5 This handshake logics (i.e., the communication between CSS and PACKAGE to perform the shutdown and the blowdown), involving USS-1/2 and USB-1/2 signals, are represented in figures 1 and 2, below.

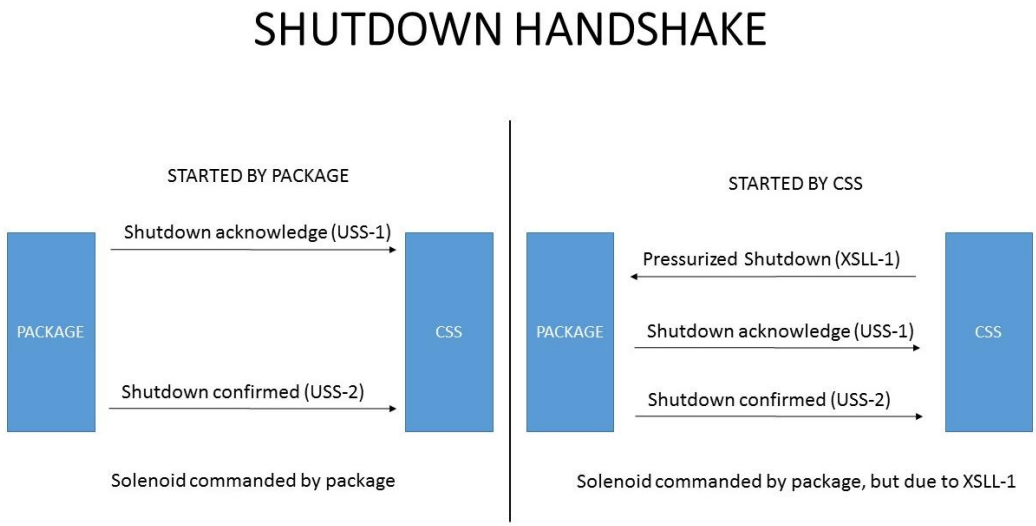

Figure 1 – Shutdown Handshake

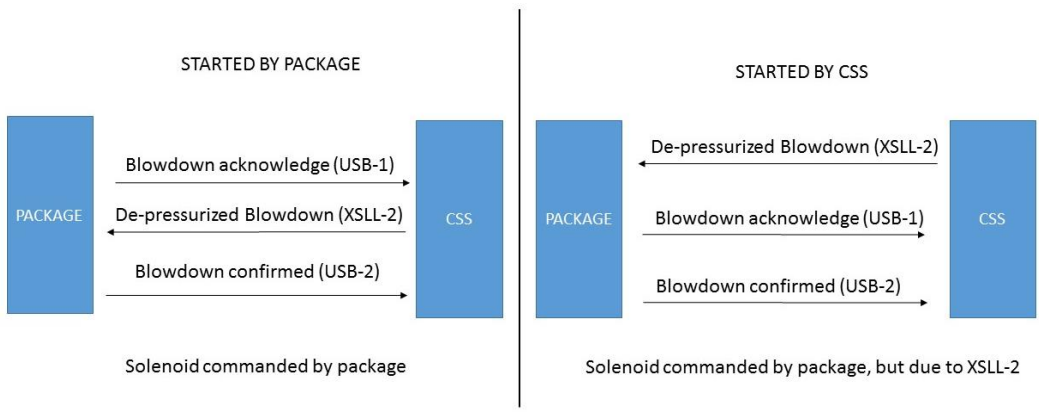

Figure 2 – Blowdown Handshake

4.3.3.6 In case the confirmed signals (USS-2 and USB-2) are not sent after a period of time, CSS shall consider that the Package has failed to perform its shutdown (USS-2) or blowdown (USB-2) and shall perform specific actions related to that Package shutdown or blowdown failure. This period of time and these actions shall be determined specifically for each Package during Detailing Engineering Design Phase along with the Packager.

4.3.3.7 The signals sent from Package to CSS shall be voltage free dry contacts (1 A @ 24 Vdc). The contacts on the Package side are energized when in normal operation and de-energized under abnormal process conditions. Interposing relay shall be installed on the Package unit side. See figure 3, below.

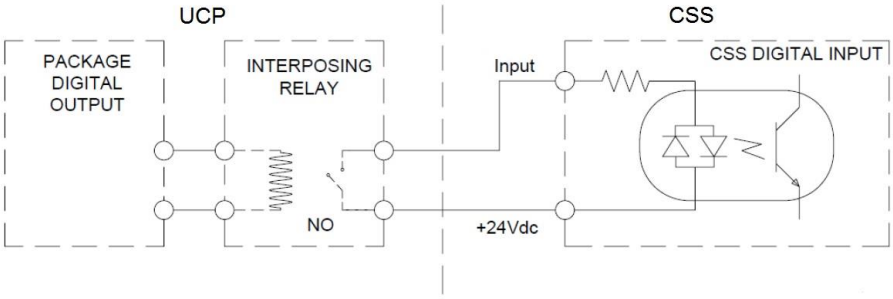

Figure 3 – Interposing Relay for signals from Package to CSS

4.3.3.8 The signals sent from CSS to Package shall be 24 Vdc energized under process normal conditions and de-energized under process abnormal conditions. Interposing relay shall be installed on the PACKAGE unit side. See figure 4, below.

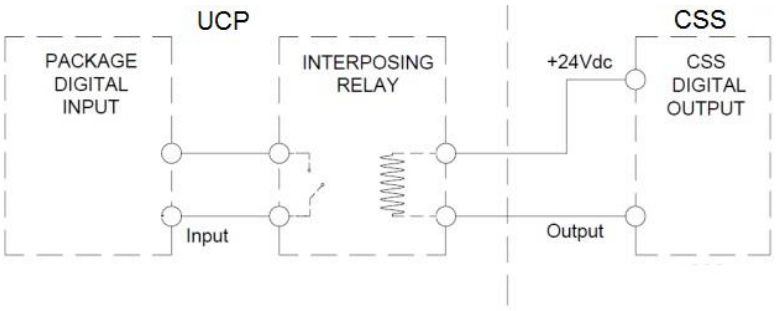

Figure 4 – Interposing Relay for signals from CSS to Package

4.3.3.9 Electrical loads commanded by PACKAGE (EA-04 loads) shall have the interposing relay inside the electrical drawer. See figure 5, below.

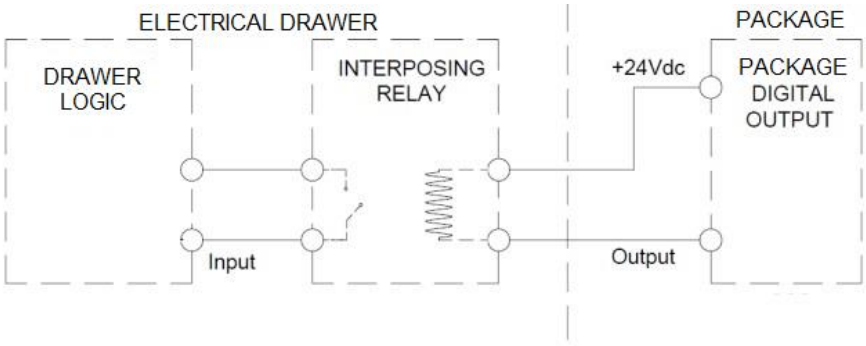

Figure 5 – Interposing Relay for signals from Package to EA-04 loads

4.3.3.10 For analog signals interchanged between PACKAGE UCP and CSS, galvanic isolators shall be foreseen. The isolator shall be located in the corresponding CSS controller.

4.3.3.11 All related logic documents such as the application program, logic diagrams and similar shall be fully documented and delivered during PACKAGE project execution in order to ensure proper operation, maintenance, testing and troubleshooting procedures.

4.3.3.12 It shall be performed in PACKAGE UCP controller a sequence of event logic, indicating the first event, i.e., the first tag responsible for causing a PACKAGE shutdown whether it occurs.

4.3.3.13 Packages that manipulate hydrocarbon content shall have 2 (two) independent sub-systems, 1 (one) dedicated to monitoring and control functions and other to perform safety protection applications.

4.3.3.14 All equipment (except equipment powered by essential loads) shall have devices to prevent automatic start in the scenario of restablishing the power supply after a blackout.

4.3.4 P2 Package Requirements:

4.3.4.1 P2 type Packages shall have all P1 type characteristics as a minimum, plus the following ones.

4.3.4.2 Additional information may be also available at SOS HMIs. Thus, redundant Gigabit Ethernet (IEEE 802.3an) link shall be provided between Packages UCP and SOS Package Units Data Server.

4.3.4.3 In case of failure of network communication between Package UCP and CSS, the Package shall continue in operation (except otherwise specified). All hardwired safety signals shall remain effective.

4.3.4.4 The PACKAGE switch to interconnect the PACKAGE with Package Unit LAN shall be manageable and follow all requirements described in AUTOMATION NETWORK REQUIREMENTS project documentation. It shall be informed the necessary number of ports to interconnect this switch with CSS.

4.3.4.5 All network addresses needed to its intercommunication shall be informed, with a request of the range of IPs to be used.

4.3.4.6 It shall be provided 2 OPC UA server drivers along with package. These OPC UA drivers will be installed in Package Unit Data Servers, in order to standardize the communication between Package controller and Package Unit Data Servers. The OPC UA driver shall be OPC Foundation™ compliant. Only in case the Package controller doesn’t support OPC UA Server driver, PETROBRAS accepts Modbus/TCP driver or a dedicated communication driver for communication between Package controller and Package Unit Data Servers.

4.3.5 P2S Package Requirements:

4.3.5.1 P2S type Packages shall have all P2 type characteristics as a minimum, plus the following ones.

4.3.5.2 Although P2S Packages can be grouped as P2 type Packages, they have some special requirements such as additional communication link for a dedicated remote HMI installed in the CCR for supervision and operation (if applicable) of the Package.

4.3.5.3 This HMI CPU shall be sutiable for mounting in a 19” rack, preferably occupying 1U. It shall be supplied along with a KVM extender.

4.3.6 P2C Package Requirements:

4.3.6.1 P2C type Packages shall have all P2 type characteristics as a minimum, plus the following ones.

4.3.6.2 P2C Package is a P2 type Package, able to be supervised and operated by SOS HMIs through digital network communication (Ethernet).

4.3.6.3 It shall be submitted all the documentation required in order to enable the creation and configuration of the Package screens in SOS.

4.3.6.4 All the necessary logic to prioritize commands from SOS HMI or from Package HMI shall be executed in Package controller.

4.3.7 P2SC Package Requirements:

4.3.7.1 P2SC type Packages shall have the requirements of both P2C and P2S types.

4.3.7.2 A descriptive memorandum containing detail description of control and safeguarding logic shall be furnished during PACKAGE project execution.

4.3.8 An schematic diagram for Packages is depicted in figures 6 and 7, below.

P1

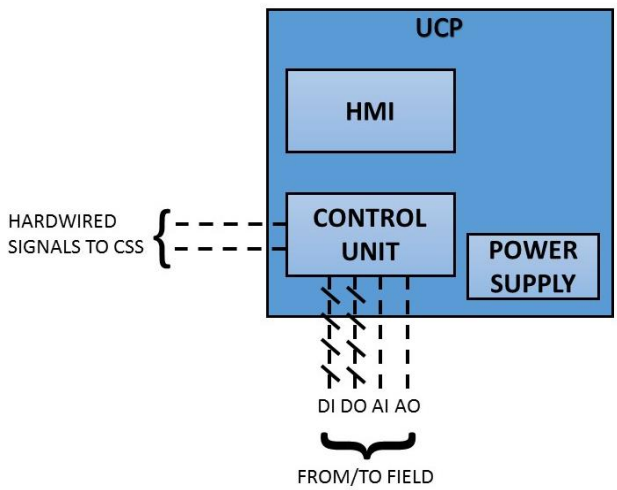

Figure 6 – Schematic for P1 type Packages

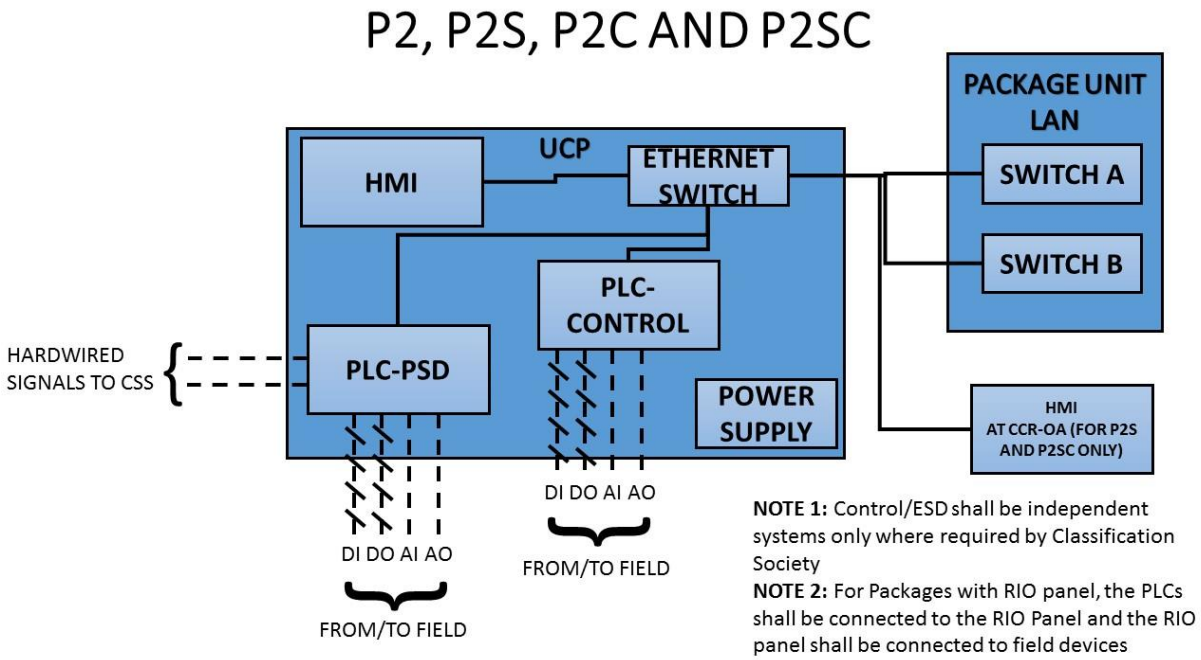

Figure 7 – Schematic for P2, P2S, P2C and P2SC type Packages

5 INSTRUMENTATION REQUIREMENTS

5.1 General

5.1.1 Electronic instruments shall meet the requirements of IEC 61000-6-1/2 regarding electromagnetic compatibility.

5.1.2 All instruments, junction box, panels, materials and equipment proper to be used in hazardous areas, shall have conformity certificates complying with PORTARIA INMETRO Nº 179, DE 18/maio/2010, and its annexes, changed by PORTARIA INMETRO Nº 89, de 23/fereveiro/2012, and shall be approved by Classification Society.

5.1.3 Electrical equipment installed in external areas, that shall be kept operating during emergency shutdown ESD-3P and ESD-3T shall be certified for installation in hazardous areas Zone 2 Group IIA temperature T3.

5.1.4 All instruments and their accessories shall be at least IP-56 (IEC 60529) and according to Classification Society rules.

5.1.5 By the time the Package is delivered, all its components shall not be obsolete. Warranty and spare parts policies are described in the respective Material Requisition, Purchase Order or Contract. Continuity of spare parts supply and maintenance shall be given for a 5 year period.

5.1.6 Instrument shall be painted to withstand the environment conditions specified in item 3. Colors shall be in accordance with DR-ENGP-I-1.15-R.3 – COLOR CODING.

5.1.7 All electrical and electronic devices, beyond mechanical parts of the equipment, shall be designed and constructed in a tropicalized version. Tropicalization process comprises application of reinforced protective resin Class 2 according to IEC 61086 and fungus proof according to ASTM G21 on all printed circuit boards, use of anti-rust materials and accessories and other implementations according to manufacturers' experiences and related rules, aiming to provide a robust and reliable construction.

5.1.8 All junction boxes shall be according to I-ET-3010.00-1200-800-P4X-013 - GENERAL CRITERIA FOR INSTRUMENTATION PROJECTS.

5.1.9 All Packages hoods' Fire and Gas logic shall be interconnected to Package UCP.

5.2 Units

5.2.1 The following units for the main variables shall be used:

- Temperature: °C
- Flow rate
  - Liquids: m³/h
  - Water Vapor t/h
  - Gas: m³/h (@ 20 °C and 101.325 kPa abs)
- Pressure: bar-g or kPa-g
- Vacuum and Low Pressures: bar-a or kPa-a
- Level: % of the range, m or mm

5.3 Analog Signals

5.3.1 Electronic Instrumentation

Whenever necessary, analog signals communication with CSS shall be standardized as follows:

5.3.1.1 P0 Type Package – classification described in item 5.2

- 4 – 20 mA plus digital communication with HART protocol, certified by the HART FOUNDATION.

5.3.1.2 P1, P2, P2C, P2S and P2SC Types

- 4 - 20 mA.
- 4 - 20 mA plus digital communication with HART protocol, certified by the HART FOUNDATION.

NOTE 1: For P2 and P2C type Packages, where Asset Management System is required, HART protocol shall be applied.

5.3.1.3 Internal Signals

- According to Package supplier standard.

5.4 Solenoid Valves

5.4.1 Power consumption of the solenoid valves shall be limited to 5W per valve for the solenoids connected to CSS I/O cards.

5.5 Control Valves

5.5.1 For sizing control valves, standard ISA 75.01.01 shall be used, and it is mandatory to check the following items:

- Flow range (CVmax/CVmin);
- Type of flow (sub-critical vaporization, cavitation and 2-phase);
- Influence of viscosity;
- Limit of velocity at valve inlet;
- Minimum diameter in compressible flows to avoid sonic velocities.

5.5.2 Flow speed shall be limited to 10 m/s for services with liquid and 110 m/s for services with gases or vapors;

5.5.3 The noise level generated by control valves shall be limited to 82 dB(A) measured 1.0 m downstream the valve and 1.0 m away from the pipe surface, in conformity to IEC 60534.

5.5.4 CV selected flow rate coefficient (valve Cv) shall be such that:

- CV min shall be achieved with an opening greater than or equal to 10%.
- CV max shall be achieved with aperture less than or equal to 90%.

Selected Cv shall be immediately superior to the theoretical calculated value, considering the manufacturer's catalogue.

NOTE: This item does not apply to anti-surge control valves. These valves shall be sized by the respective MANUFACTURER.

5.6 Shutdown Valves (SDV)

5.6.1 The maximum stroke time allowed for any SDV actuation shall be 45 seconds.

5.6.2 The SDVs shall be fire tested type when connected to vessels or tanks handling hydrocarbons or toxic products. Where fire-safe valves are required, these shall be specified in order to meet ISO 10497 requirements.

5.6.3 The SDVs shall be tested according to API 6D.

5.7 Blowdown Valves (BDV)

5.7.1 The BDVs shall be fire tested type when connected to vessels or tanks handling hydrocarbons or toxic products. Where fire-safe valves are required, these shall be specified in order to meet ISO 10497 requirements.

5.7.2 The BDVs shall be tested according to API 6D.

5.7.3 The Package BDVs shall not be used for operational blowdowns, being restricted to be used in emergency blowdowns. For operational blowdowns, a different valve shall be used.

5.7.4 All BDVs related to process plant that require UCP actuation signals shall be able to be actuated by the CSS and by the UCP. This must be achieved by the use of two solenoid valves. This shall be used in order to guarantee that the CSS shall always be able to depressurize regardless of the UCP malfunction.

5.8 Instrumentation Cables

5.8.1 Minimum requirements for design, manufacturing, installation and tests of the instrumentation cables shall be in accordance with Classification Society rules.

5.8.2 Instrumentation cables shall follow IEC 60092-350, IEC 60092-360 and IEC 60092-376. Cables for intrinsically safe circuits shall follow the IEC-60079-14.

5.8.3 All cabling associated with the FGS shall be suitably protected against mechanical damage/hazardous events and consideration shall be given to diverse routing to minimize the possibility of loss of system capability due to cable damage arising from fire or other physical causes. All cables shall be fire resistant in accordance with IEC 60331.

5.8.4 All cables and multicables that cross or are contained in areas classified as Zone 0, Zone 1 or Zone 2 or in open areas shall be armored.

5.8.5 All cables and multicables shall be tagged according to I-ET-3010.00-1200-800-P4X-010 – CRITERIA FOR ESTABLISHING CABLE CODES AND CABLE GLAND CODES.

5.9 Safety and Relief Valves (PSV)

5.9.1 Selection and sizing of pressure relief valves and vacuum valves shall be in accordance to API RP 520 and API STD 526 standards.

5.9.2 PSV leakage shall be certified according to API STD 527.

5.9.3 All safety and relief valves shall have capacity certificates in conformity to ASME Section VIII Division I, supplied by a qualified and responsible Certifying Agency.

5.10 Materials for Pneumatic / Hydraulic Transmission

5.10.1 Pneumatic and hydraulic instruments transmission lines inside the PACKAGE shall be made of stainless steel, ASTM A269 GR. TP 316L with molybdenum minimum content of 2.5%.

5.10.2 Seamless stainless steel tubing shall be used.

5.10.3 Tubing connections shall comply with ASTM A269 GR. TP 316L. Connections shall use double ferrule technology.

5.11 Junction Boxes

5.11.1 At the battery limit of the Package, a junction box shall be installed in order to act as an interface with CSS I/O panels.

5.11.2 Canceled.

5.11.3 Instrument junction boxes shall be segregated according to I-ET-3010.00-1200-800-P4X-013 - GENERAL CRITERIA FOR INSTRUMENTATION PROJECTS.

5.11.4 Signals to CSS related to PCS, PSD, HCS, HSD and FGS sub-systems, must be segregated in different terminal strips and multicables (where applicable), when installed inside the same junction box. The junction boxes shall be segregated into 3 types:

- **TYPE 1:** for signals using flame-resistant cables (PSD/HSD/FGS);
- **TYPE 2:** for signals related to safety interlocks (PSD/HSD);
- **TYPE 3:** for signals related to process control (PCS/HCS).

5.11.5 Junction boxes for instrumentation cables in classified or open areas shall have a minimum Ingress Protection rating of IP-56 and shall be "Ex e" or "Ex d" certified and certified for at least Zone 2.

5.11.6 Entry of cables through the top of the junction box is not allowed.

5.12 Grounding

5.12.1 Design and execution of grounding systems for automation and instrumentation installations shall comply with the requirements of IEC 61892 and IEC-60079. Protection Earthing (PE) and Instrument Earthing (IE) shall be segregated. If intrinsically Safe Earthing is used, it shall be segregated from the PE and IE. For further details of panel and signal cable grounding, refer to item 18 of I-ET-3010.00-1200-800-P4X-013 - GENERAL CRITERIA FOR INSTRUMENTATION PROJECTS; item 3.13 of I-ET-3010.00-5140-700-P4X-001 - SPECIFICATION FOR ELECTRICAL DESIGN FOR OFFSHORE UNITS, and I-DE-3010.00-5140-700-P4X-003 - GROUNDING INSTALLATION TYPICAL DETAILS.

5.13 Unit Control Panel (UCP) and Remote I/O (RIO) Panel

5.13.1 Panel structure shall be such that it can be lifted by eye bolts without causing resultant distortion.

5.13.2 Grounding straps shall be provided for all non-fixed surfaces.

5.13.3 All panel wiring shall be identified at both ends by plastic rings with the terminal block number.

5.13.4 All panels shall comply with I-ET-3010.00-5520-888-P4X-001 – AUTOMATION PANELS.

5.13.5 Some Packages shall have a Remote I/O (RIO) panel installed on field, to be connected to its Package UCP. For a list of which Packages have this requirement, check AUTOMATION INTERFACE OF PACKAGE UNITS project documentation.

5.13.6 Indoor Panels

5.13.6.1 Indoor panels and accessories installed in air conditioned room or ventilated room (indoor panels) shall be supplied with IP-22 protection degree, according to IEC 60529, as a minimum.

5.13.7 Outdoor Panels

5.13.7.1 Outdoor panels and accessories shall be supplied with IP-56 protection degree, according to IEC 60529, as a minimum. Hazardous area requirements shall also be taken into account. See also item 4.1.

5.13.7.2 Where pressurization is selected to comply with hazardous area requirements, panel shall be certified as Ex-pz, panels that shall be kept energized during ESD-3P or ESD-3T shall be certified for Zone 2, according to IEC-60079.

5.13.7.3 Instrument air will be used for panel pressurization and all necessary devices related to the pressurization control system shall be provided.

5.14 Cable Tray and Cables

5.14.1 Cables/cable trays up to battery limit Junction Box shall be supplied mounted and tested. A calculation memory of the cable trays' occupation, consistent with 3D model and cable tray list, shall be supplied, respecting a maximum occupation of 60% of the tray volume.

5.14.2 For criteria related to modeling, sizing and documentation relative to cable trays, except the 60% occupation criteria, refer to I-ET-3010.00-5140-700-P4X-001 – SPECIFICATION FOR ELECTRICAL DESIGN FOR OFFSHORE.

5.15 Asset Management System (AMS)

5.15.1 AMS System shall acquire data from PACKAGE UNIT through the PACKAGE UNIT LAN. For more information on AMS System, see I-ET-3010.00-1200-850-P4X-002 – ASSET MANAGEMENT SYSTEM (AMS).

5.15.2 For P0 type Packages, all transmitters and valve positioners interconnected to CSS-PCS, as well as all transmitters interconnected to PSD, shall be interconnected to AMS.

5.15.3 P2/P2S/P2C/P2SC type Packages with closed loop, the transmitters and control valve positioners shall be interconnected to AMS.

NOTE 1: All instruments interconnected to AMS shall comply with HART FOUNDATION.

NOTE 2: For Package type P2/P2S/P2C/P2SC, PACKAGES may use its UCP controller with analog modules with HART capability, allowing AMS data access through Single Gigabit Ethernet link. In case UCP controller does not have controller with I/O modules with HART capability, the PACKAGE may use HART multiplexers connected to a TIA/EIA-485 to Ethernet converter, to be interconnected directly to AMS Workstation. Other solutions to acquire AMS data are subjected to PURCHASER approval.

NOTE 3: AMS feature is not applicable for P1 type Packages

6 PACKAGE MAIN EQUIPMENT REQUIREMENTS

6.1 Package Instruments Numbering and Identification

6.1.1 Tag numbers of the package cabinets or skids and instruments shall be determined and managed by PACKAGER in accordance with the project numbering and identification specifications

6.1.2 Tag numbers of the cables outside the skid shall be determined and managed by PACKAGER.

6.1.3 Tag numbers of the cables inside the skid shall be determined and managed by PACKAGER in accordance with the project numbering and identification specifications

6.1.3.1 Instruments shall be identified in accordance with I-ET-3000.00-1200-940-P4X-001 – TAGGING PROCEDURE FOR PRODUCTION UNITS DESIGN.

6.1.3.2 Identification of instruments shall be according to I-ET-3010.00-1200-800-P4X-013 – GENERAL CRITERIA FOR INSTRUMENTATION PROJECTS.

6.1.3.3 Junction Boxes Identification shall be in accordance with I-ET-3000.00-1200-940-P4X-001 – TAGGING PROCEDURE FOR PRODUCTION UNITS DESIGN.

6.1.3.4 Cables Identification shall be in accordance with I-ET-3010.00-1200-800-P4X-010 – CRITERIA FOR ESTABLISHING CABLE CODES AND CABLE GLAND CODES

6.2 UCP Human Machine Interface (HMI)

6.2.1 For P1 type Packages, the operator interface shall have at least:

- Push-buttons and leds signaling;
- Small electronic graphic units and keyboard;
- Video screen and keyboard.

6.2.2 For P2 type Packages, the operator interface shall be mounted at the external face of the panel front door. All supervision and control and start/stop functions, local data archiving, maintenance and configuration functions, alarm processing and status displays shall be provided at UCP HMI.

6.2.3 During Package Commissioning (SIT and/or SAT phases) the UCP HMI shall be available for use and fully integrated with both the local instruments and the SOS HMIs.

6.2.4 Field push buttons shall be retentive type, with cover to avoid spurious actuation.

6.2.5 All operator commands to start loads shall be implemented with a confirmation

6.3 Programming Tools (P1, P2, P2C, P2S and P2SC Packages)

6.3.1 Programming of Package Control System (controllers, HMI, switches, screens and all programmable/configured variables) as well as applicable software shall be supplied fully compatible with Microsoft Windows® based operating system.

6.3.2 The programming software shall allow visualization, monitoring, modifications, simulation of the application software from the programming tools (PC based) in both on-line and off-line modes.

6.3.3 All keys, drivers, manuals and licenses of all software inside Package shall be provided. No software access restrictions will be accepted.

6.3.4 Package supervisory system software shall be supplied to be installed at Engineering Workstation. Package UCP controller software shall be supplied to be installed at Maintenance Workstation.

6.4 Package HMI And Screen Requirements

6.4.1 The following requirements are minimum for P2, P2S and P2C PACKAGE UNITS. Whenever the mentioned requirement is for all P2 type packages, it is represented as P2x. When a determined requirement is for a specific type, it is indicated.

6.4.2 P2x shall be supplied with a Supervisory Software installed in its UCP, named PACKAGE HMI.

6.4.3 The PACKAGE HMI screens shall cover all PACKAGE UNIT functionalities, including not only PACKAGE UNIT´s own process, but also its diagnostic information. Data and variables shall be displayed following PACKAGE UNIT Process and Instrumentation Diagrams (P&ID). The PACKAGE HMI screens shall be developed in a way that it is easy for the operator to understand its contents. Real-time values, equipment status changes, alarms and failures shall be highlighted and promptly identifiable. There shall be at least one screen with a general overview of the PACKAGE UNIT main variables.

6.4.4 P2x Supervisory software shall be based on Microsoft Windows® operational system and shall present information through graphic screens. Preferably, P2x Supervisory Software shall be of the same manufacturer and version as the UNIT SOS. PACKAGE SUPPLIER shall liaise with CONTRACTOR in order to identify UNIT SOS Supervisory Software manufacturer and version.

6.4.5 Each P2x PACKAGE UNIT shall be supplied with a local HMI and, if defined in PROJECT´s documentation, with a dedicated workstation with the same application, to be installed in the UNIT Central Control Room (CCR). Local HMIs with touch screen instead of keyboard/trackball are allowed.

6.4.6 HMI screens shall be in Brazilian Portuguese language and in additional languages requested in the PACKAGE UNIT technical specification.

6.4.7 PACKAGE UNITs´ alarms acknowledgment applied from PACKAGE HMI or from the dedicated workstation shall be synchronized with UNIT SOS. It shall also be possible to acknowledge P2x PACKAGE UNITs alarms from UNIT SOS. In order to accomplish that, PACKAGE SUPPLIER shall implement acknowledgement feature in PACKAGE UNIT side (controller), so that this acknowledgement can be easily readable from SOS PACKAGE UNIT RTDS. A reference for this implementation is shown in PROJECT´s IMPLEMENTATION OF INTERLOCK AND CONTROL LOGIC document.

6.4.8 P2x PACKAGE UNITs HMIs and dedicated workstation(s) appearance and functionalities shall follow the defined in I-ET-3010.00-5520-800-P4X-001 – SUPERVISION AND OPERATION SYSTEM (SOS) SCREENS, whenever possible, to keep PACKAGE UNITS´ operation screens similar to SOS screens. At least, the following items shall be complied: engineering units, controllers mode (direct/reverse), control valves´ indication, level indication, line colors and open/close/start/stop indications.

7 TEST REQUIREMENTS

7.1 Tests

7.1.1 Control, safety and monitoring equipment and devices shall be tested and certified under the environmental conditions herein stipulated according to Classification Society rules and project documents. FAT, SAT and SIT shall take into account IEC 62381, IEC 62337 and Classification Society rules.

7.1.2 For FAT, Inspection and Test Plan (ITP) shall be sent for approval with 60 (sixty) days in advance. PETROBRAS shall be considered a witness point for FAT.